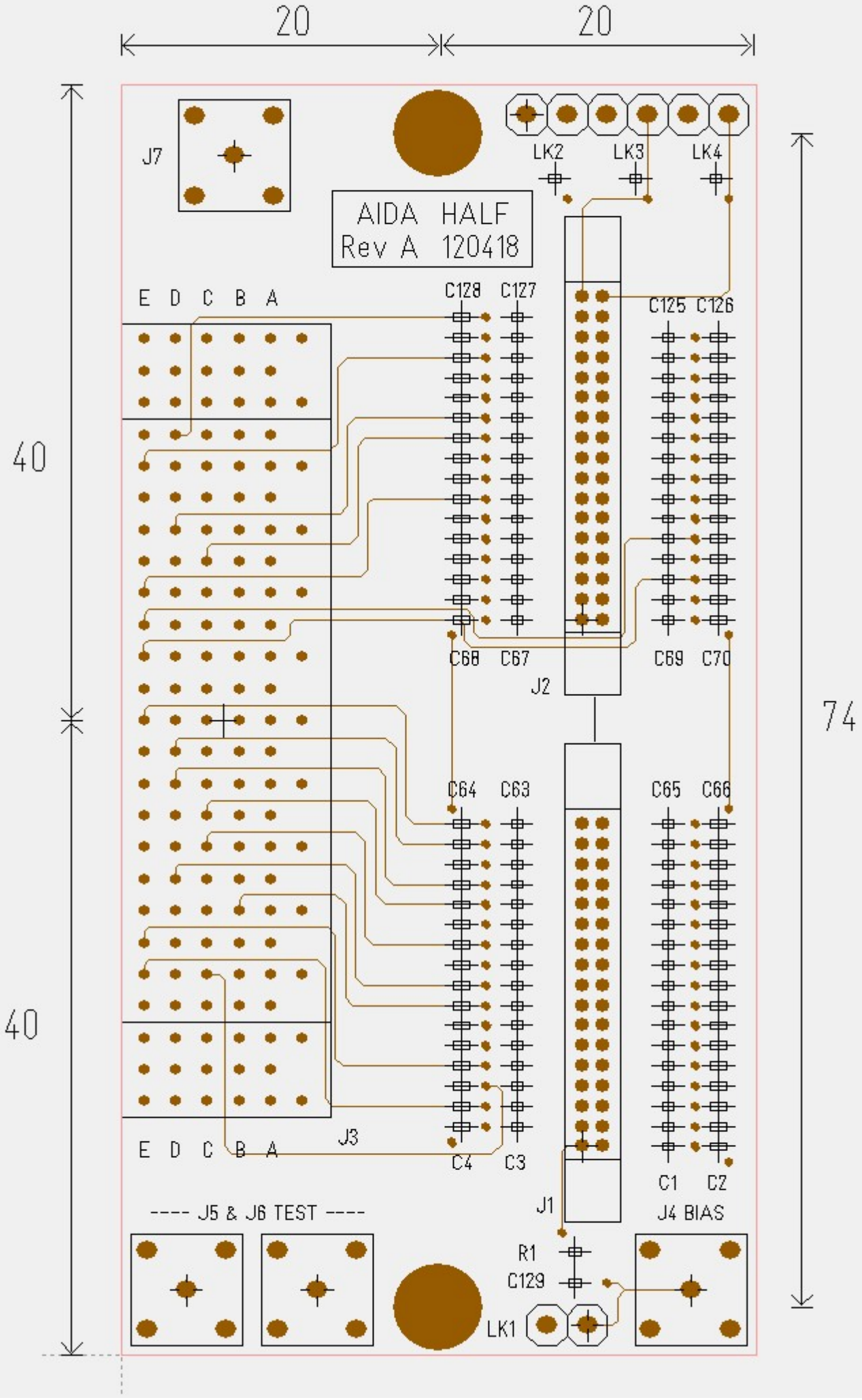
20
20
40
40
74
J7
LK2
LK3
LK4
AIDA HALF
Rev A 120418
E D C B A
C128 C127
C125 C126
C68 C67
C69 C70
J2
C64 C63
C65 C66
J3
E D C B A
C4 C3
C1 C2
J1
J4 BIAS
---- J5 & J6 TEST ----
R1
C129
LK1